Electrolux PROFESSIONAL

Modular Cooking Range Line thermaline 80 - Sink unit on closed base, 1 Side, H=700

ITEM #

MODEL #

NAME #

SIS #

AIA #

588213 (MAZAGAD3OO) Sink Unit on Closed Base, one-side operated

Short Form Specification

Item No.

Sink unit on closed base, with a large stainless steel tap, constructed according to DIN 18860_2 with 20 mm drop nose top and 70 mm recessed plinth. Internal frame for heavy duty sturdiness in stainless steel. 2 mm top in 1.4301 (AISI 304). Flat surface construction, easily cleanable. THERMODUL connection system enables seamless worktop when units are connected and avoids soil penetrating.
IPX5 water resistant certification.
Configuration: Freestanding, one-side operated.

Main Features

- Large stainless steel tap.
- All major components may be easily accessed from the front.
- THERMODUL connection system creates a seamless work top when units are connected to each other thus avoiding soil penetrating vital components and facilitating the removal of units in case of replacement or service.

Construction

- IPX5 water resistance certification.
- Fitted on a closed base.
- 2 mm top in 1.4301 (AISI 304).
- Unit constructed according to DIN 18860_2 with 20 mm drop nose top and 70 mm recessed plinth.
- Flat surface construction with minimal hidden areas to easily clean all surfaces
- Internal frame for heavy duty sturdiness in stainless steel.

APPROVAL:

Modular Cooking Range Line thermaline 80 - Sink unit on closed base, 1 Side, H=700

Front

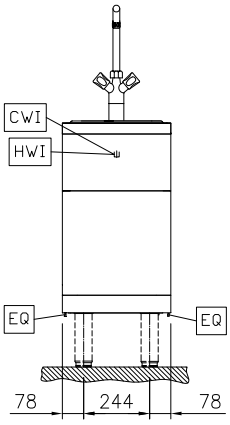

Side

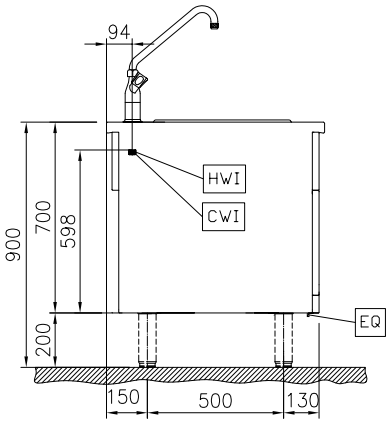

CWI1 = Cold Water inlet 1 (cleaning)
D = Drain
HWI = Hot water inlet

Top

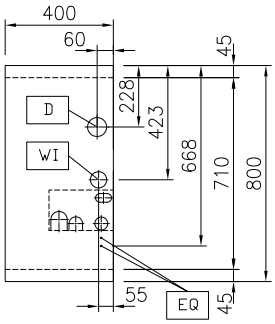

Water:

Inlet water line size:	
588213 (MAZAGAD300)	3/4"
Drain line size:	1"
Incoming Cold/hot Water line size:	3/4"

Key Information:

External dimensions, Width:	400 mm
External dimensions, Depth:	800 mm
External dimensions, Height:	700 mm
Net weight:	28 kg

The company reserves the right to make modifications to the products without prior notice. All information correct at time of printing.

2024.10.06

Optional Accessories

- Connecting rail kit, 800mm PNC 912500 ❑
- Stainless steel side panel, 800x700mm, freestanding PNC 912509 ❑
- Portioning shelf, 400mm width PNC 912522 ❑
- Portioning shelf, 400mm width PNC 912552 ❑
- Folding shelf, 300x800mm PNC 912577 ❑
- Folding shelf, 400x800mm PNC 912578 ❑
- Fixed side shelf, 200x800mm PNC 912583 ❑
- Fixed side shelf, 300x800mm PNC 912584 ❑
- Fixed side shelf, 400x800mm PNC 912585 ❑
- Stainless steel front kicking strip, 400mm width PNC 912630 ❑
- Stainless steel side kicking strip left and right, freestanding, 800mm width PNC 912655 ❑
- Stainless steel side kicking strip left and right, back-to-back, 1610mm width PNC 912661 ❑
- Stainless steel plinth, freestanding, 400mm width PNC 912859 ❑
- Connecting rail kit: modular 80 (on the left) to ProThermetic tilting (on the right), ProThermetic stationary (on the left) to ProThermetic (on the right) PNC 912971 ❑
- Connecting rail kit: modular 80 (on the right) to ProThermetic tilting (on the left), ProThermetic stationary (on the right) to ProThermetic (on the left) PNC 912972 ❑
- Endrail kit, flush-fitting, left PNC 913109 ❑
- Endrail kit, flush-fitting, right PNC 913110 ❑
- Endrail kit (12.5mm) for thermaline 80 units, left PNC 913200 ❑
- Endrail kit (12.5mm) for thermaline 80 units, right PNC 913201 ❑
- Stainless steel side panel, left, H=700 PNC 913214 ❑
- Stainless steel side panel, right, H=700 PNC 913215 ❑
- T-connection rail for back-to-back installations without backsplash PNC 913227 ❑
- Insert profile D=800mm PNC 913230 ❑
- Endrail kit, (12.5mm), for back-to-back installation, left PNC 913249 ❑
- Endrail kit, (12.5mm), for back-to-back installation, right PNC 913250 ❑
- Endrail kit, flush-fitting, for back-to-back installation, left PNC 913253 ❑
- Endrail kit, flush-fitting, for back-to-back installation, right PNC 913254 ❑
- Side reinforced panel only in combination with side shelf, for freestanding units PNC 913258 ❑
- Side reinforced panel only in combination with side shelf, for back-to-back installations, left PNC 913271 ❑
- Side reinforced panel only in combination with side shelf, for back-to-back installation, right PNC 913272 ❑
- Stainless steel dividing panel, 800x700mm, (it should only be used between Electrolux Professional thermaline Modular 80 and thermaline C80) PNC 913668 ❑
- Stainless steel side panel, 800x700mm, flush-fitting (it should only be used against the wall, against a niche and in between Electrolux Professional thermaline and ProThermetic appliances and external appliances - provided that these have at least the same dimensions) PNC 913684 ❑

The company reserves the right to make modifications to the products without prior notice. All information correct at time of printing.